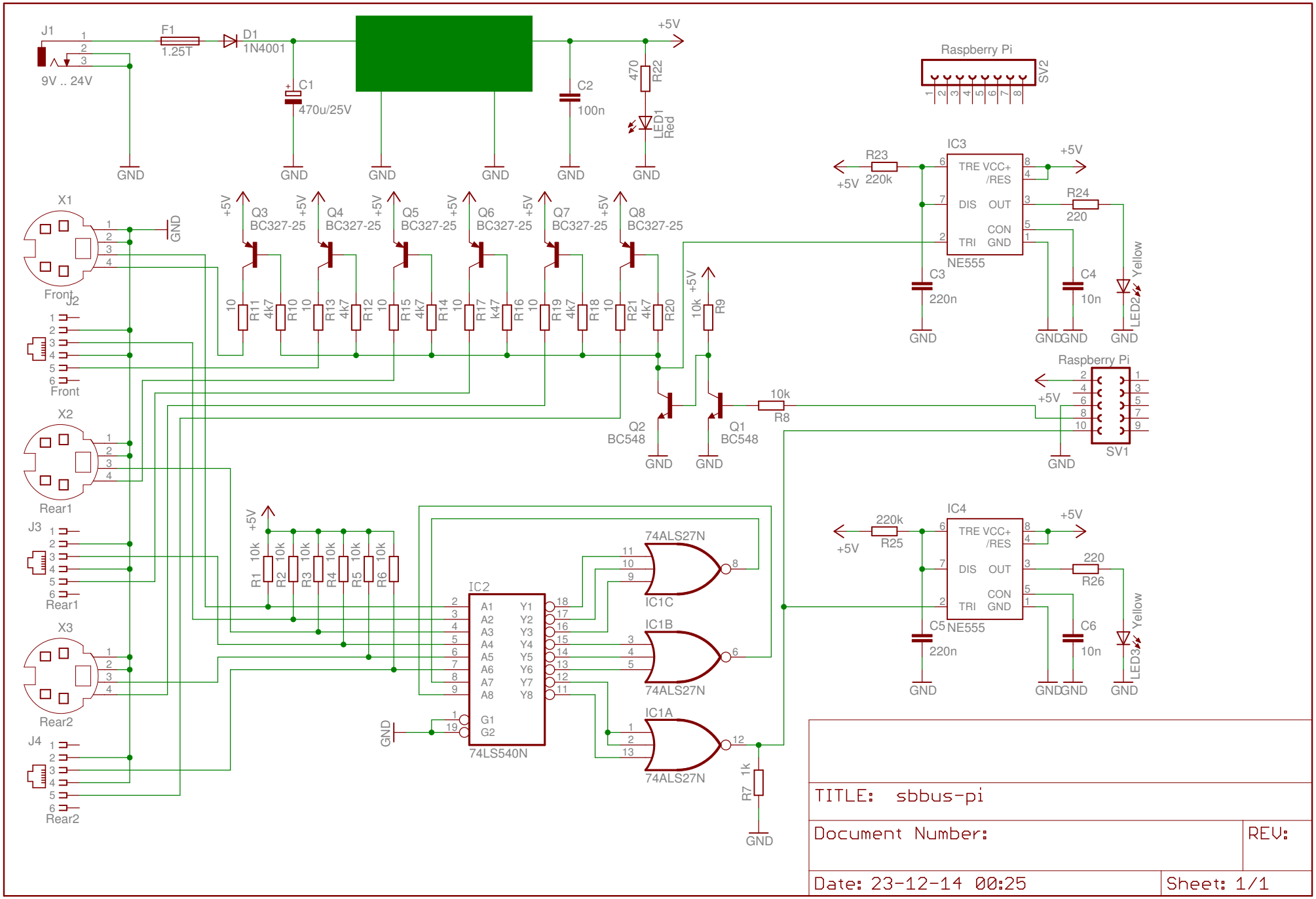

TITLE: sbbus-pi

Document Number:

REV:

Date: 23-12-14 00:25

Sheet: 1/1