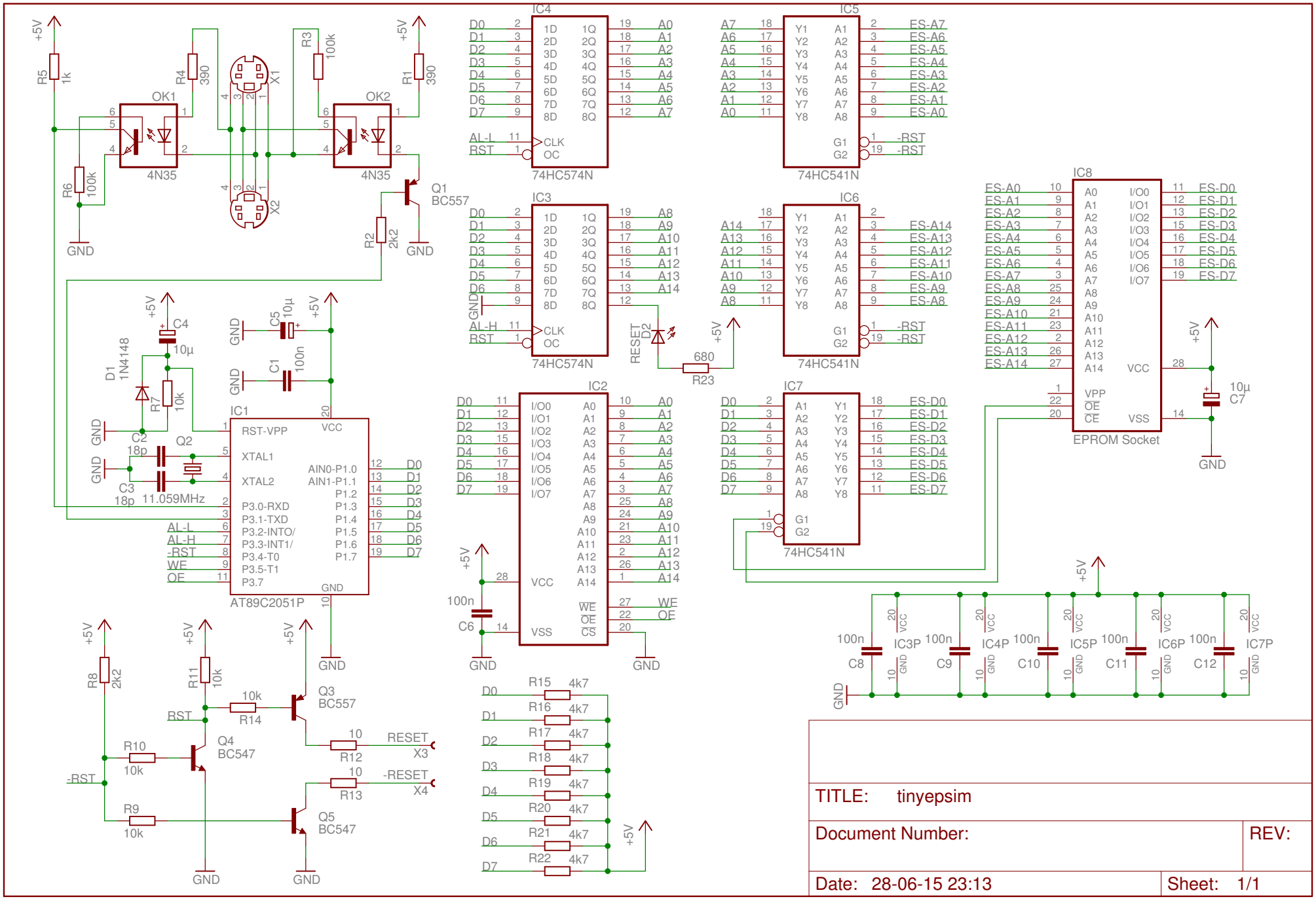
IC4
74HC574N
IC5
74HC541N
IC3
74HC574N
IC6
74HC541N
IC8
EPROM Socket
IC1
AT89C2051P
IC2
IC7
74HC541N
OK1
4N35
OK2
4N35
X1
X2
Q1
BC557
Q2
11.059MHz
D1
1N4148
Q3
BC557
Q4
BC547
Q5
BC547
IC3P
IC4P
IC5P
IC6P
IC7P
TITLE: tinyepsim
Document Number:
REV:
Date: 28-06-15 23:13
Sheet: 1/1